we think transport

THE HARD BRAKER.

BPW ECO Disc

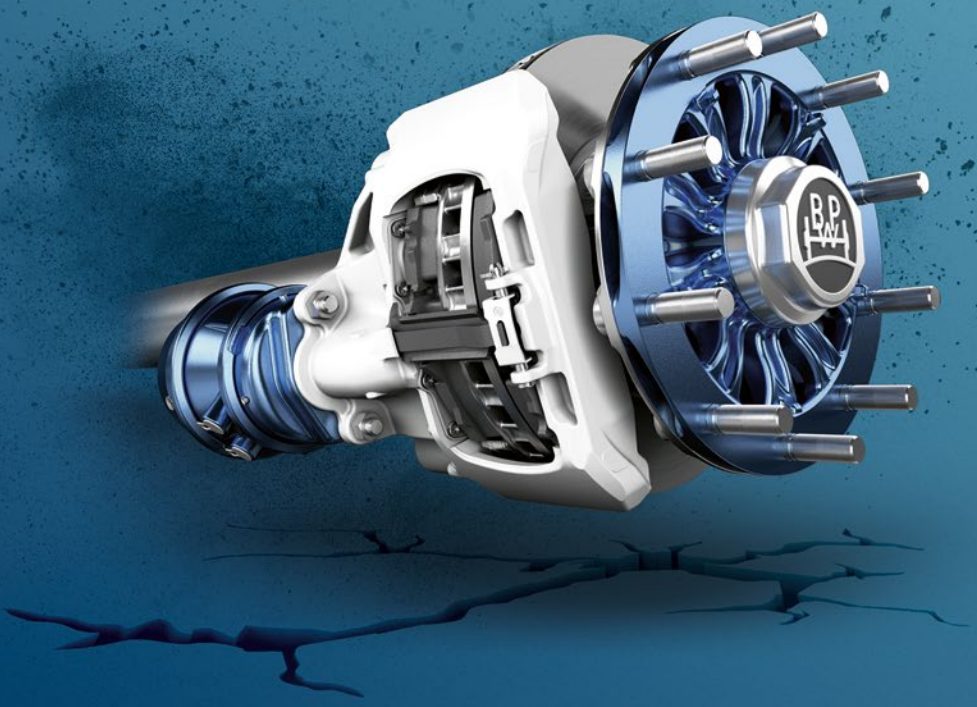

The ECO Disc. More durable. Easier to service. Lighter.

The new ECO Disc is the further development of Europe's most successful trailer disc brake. It is a milestone in brake technology and – with its robust design – provides absolute reliability when the going gets tough.

The new and unique Offset Tappet Design ensures that the forces and moments on the brake pad are perfectly balanced – for even brake wear, a long service life for brake pads and therefore lower operational costs. Despite its powerful performance and robust design, the ECO Disc still manages to be extremely lightweight. It is one of the lightest brakes on the market with an additional 4 kilograms of weight savings per axle.

Last but not least: the ECO Disc is extremely easy to service. As the brake disc can be changed without disassembling the caliper, you can save up to three hours of maintenance time on a three-axle trailer when compared to conventional solutions from competitors.

IMPRESSIVE BENEFITS

- You benefit from a long service life thanks to state-of-the-art single-tappet technology and cataphoretic dip-coating.
- You reduce your operational costs with the Offset Tappet Design (OTD).*
- You can enjoy the utmost reliability thanks to the Multifunctional Adjuster (MFA).*
- You can complete maintenance work in record time – with savings of up to three hours for a three-axle trailer thanks to the unique Compact Design and disc changes without needing to remove the caliper.
- You save fuel and increase the loading capacities of your trailers – thanks to one of the lightest brakes on the market with an additional 4 kilograms of weight saving per axle.

* Patent pending

THE BPW EFFECT

3h

faster
brake disc replacement

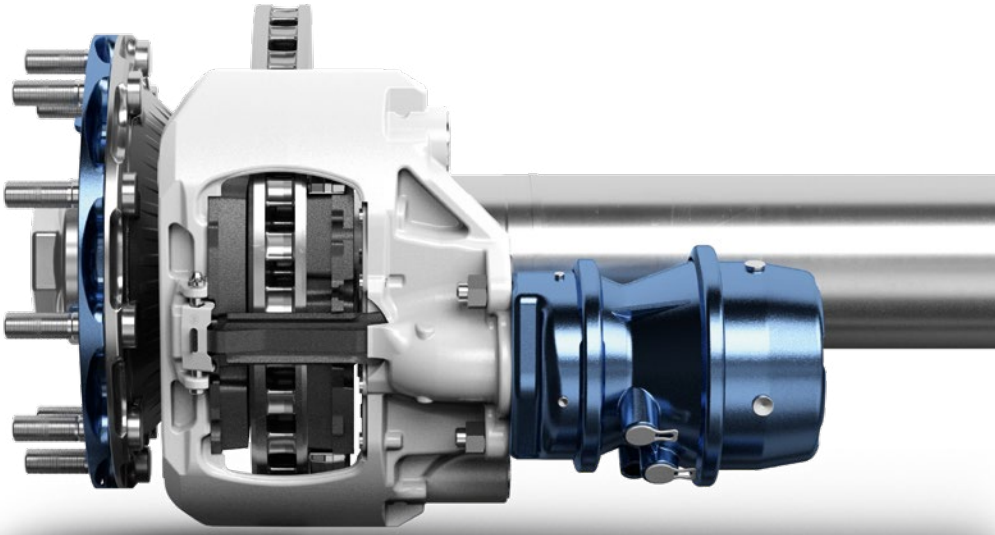

MODELS

Axle load	Wheel size 19,5"	Wheel size 22,5"	Brake	Brake disc Ø x thickness	Offset
9 t	•	•	TS2 3709	370 x 45 mm	0/120
10 t	•		TS2 3709	370 x 45 mm	0
9 t		•	TS2 4309	430 x 45 mm	0/120
10 t		•	TS2 4309	430 x 45 mm	0

The brands of the BPW Group:

BPW ECO Disc NextGen 18551801 e **conception GmbH**

BPW Bergische Achsen Kommanditgesellschaft
Postox 12 80 · 51656 Wiehl, Germany · Telehone +49 (0) 2262 78-0
info@bpw.de · **www.bpw.de**